ENERCON TECHNOLOGIES LTD

FIELD-PROVEN COTS, MOTS AND CUSTOM MILITARY POWER SOLUTIONS

M8767 SERIES

DC/DC POWER SUPPLY

PRODUCT HIGHLIGHTS

- MINIATURE
- HIGH DENSITY
- SIX OUTPUTS
- DC/DC CONVERTER
- UP TO 80W

NON ITAR

AS9100D CERTIFIED ISO 9001

ENERCON TECHNOLOGIES LTD

Cham, Switzerland
www.enercon-europe.com
enercon@enercon-europe.com
+41-41-740-4554

Global Headquarters

Netanya, Israel
www.enercon.co.il
sales@enercon.co.il
+972-73-246 9200

MULTISPHERE POWER SOLUTIONS PVT. LTD.

Gurgaon, India
www.mpsindia.in
sales@mpsindia.in
+91-124-651 0010

Applications

Military, Ruggedized, Telecom, Industrial

Special Features

- Miniature size
- High efficiency
- Wide input range
- Up to 80W, higher output available – please contact us.
- Input / Output isolation
- Fixed switching frequency (250 kHz)
- TTL logic enable
- EMI/RFI filters included
- Indefinite short circuit protection with auto-recovery
- Input over-voltage shutdown with auto-recovery
- Over temperature shutdown with auto-recovery

Environmental Conditions

Meets or exceeds MIL-STD-810D

Temperature:

Operating –55 C to +85 C (baseplate)

Storage –55 C to +125 C

Reliability

150,000 hours, calculated per MIL-STD-217F at +85°C baseplate, ground fixed.

* EMC compliance achieved when tested with 5 µH LISNs, shielded harness and static resistive load.

Electrical Specifications

DC INPUT

DC Input range: 18 to 48 VDC

Input transient protection:
All models meet or exceed (no damage) MIL-STD-1275A (100V for 50 mSec) and MIL-STD-704A, MIL-STD-704D (80V for 0.1 Sec)

Over-voltage shutdown with auto-recovery

Efficiency: Up to 80%

EMC:
Designed to meet* MIL-STD-461F CE101, CE102, CS101, CS114, CS115, CS116, RE101 RE102, RS101, RS103

Isolation:
200V between Input and Output
200V between Input and Case

DC OUTPUT (floating)

Line/Load regulation:
Less than ±1% (no load to full load, –55°C to +85°C)

Ripple and Noise:

50mVp-p, typical (max.

1%) Current limiting

(Foldback):
Continuous protection for unlimited time

Over voltage protection:
Passive transorb on output.

Over temperature protection:
Shutdown at baseplate temperature of +100°C (±5°C)
Automatic recovery at baseplate temperature lower than +90°C (±5°C)

Isolation:
200V between Output and Input
100V between Output and Case

PIN ASSIGNMENT Standard Version

PIN No.	PIN Function
9, 24	+ VIN
8, 23	VIN RTN
20	INHIBIT
5	SYN IN.
19	SIGNAL RTN

PIN No.	PIN Function
11, 26	+OUT 1
10, 25	- OUT 1
13, 28	+ OUT 2
12, 27	- OUT 2
15, 30	+ OUT 3

PIN No.	PIN Function
14, 29	- OUT 3
7, 22	+ OUT 4
6, 21	- OUT 4
4	+ OUT 5
3	- OUT 5

PIN No.	PIN Function
2, 17	+ OUT 6
1, 16	- OUT 6
18	CHASSIS

* Note: The SIGNAL RTN is referred to the input.
This is used as grounding for SYNC IN and INHIBIT signals

OUTLINE DRAWING Standard Version

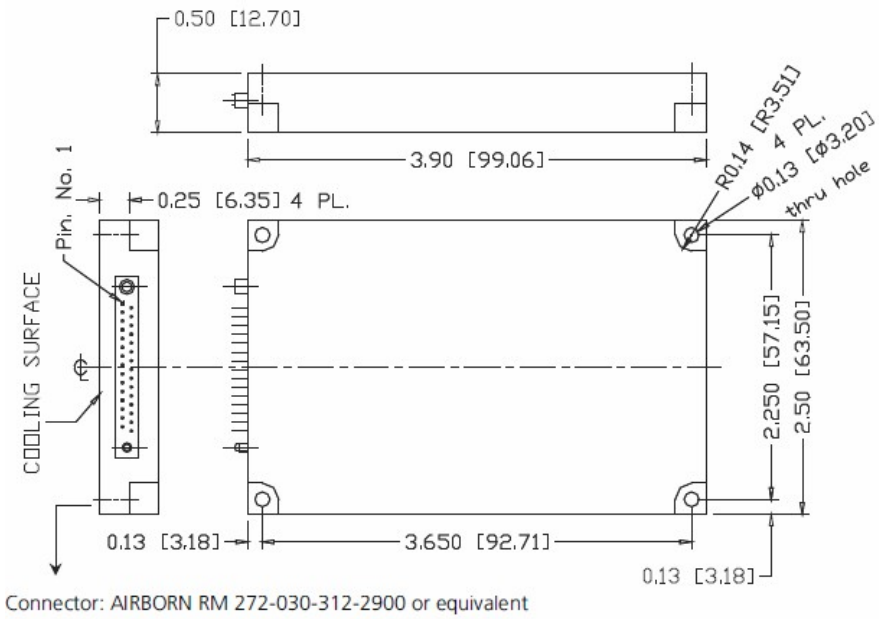

*Specifications are subject to change without prior notice by the manufacturer

Notes

1. Dimensions are in Inches [mm]
2. Tolerance is:
   .XX ±0.01IN
   .XXX 0.005 IN
3. Weight: Approx. 4.4 oz (125 g)

PIN ASSIGNMENT Optimal

PIN No.	PIN Function
9, 24	+ VIN
8, 23	VIN RTN
20	INHIBIT
5	SYN IN.
19	SIGNAL RTN

PIN No.	PIN Function
11, 26	+OUT 1
10, 25	- OUT 1
13, 28	+ OUT 2
12, 27	- OUT 2
15, 30	+ OUT 3

PIN No.	PIN Function
14, 29	- OUT 3
7, 22	+ OUT 4
6, 21	- OUT 4
4	+ OUT 5
3	- OUT 5

PIN No.	PIN Function
2, 17	+ OUT 6
1, 16	- OUT 6
18	N.C

* Note: The SIGNAL RTN is referred to the input.
This is used as grounding for SYNC IN and INHIBIT signals

OUTLINE DRAWING Optimal

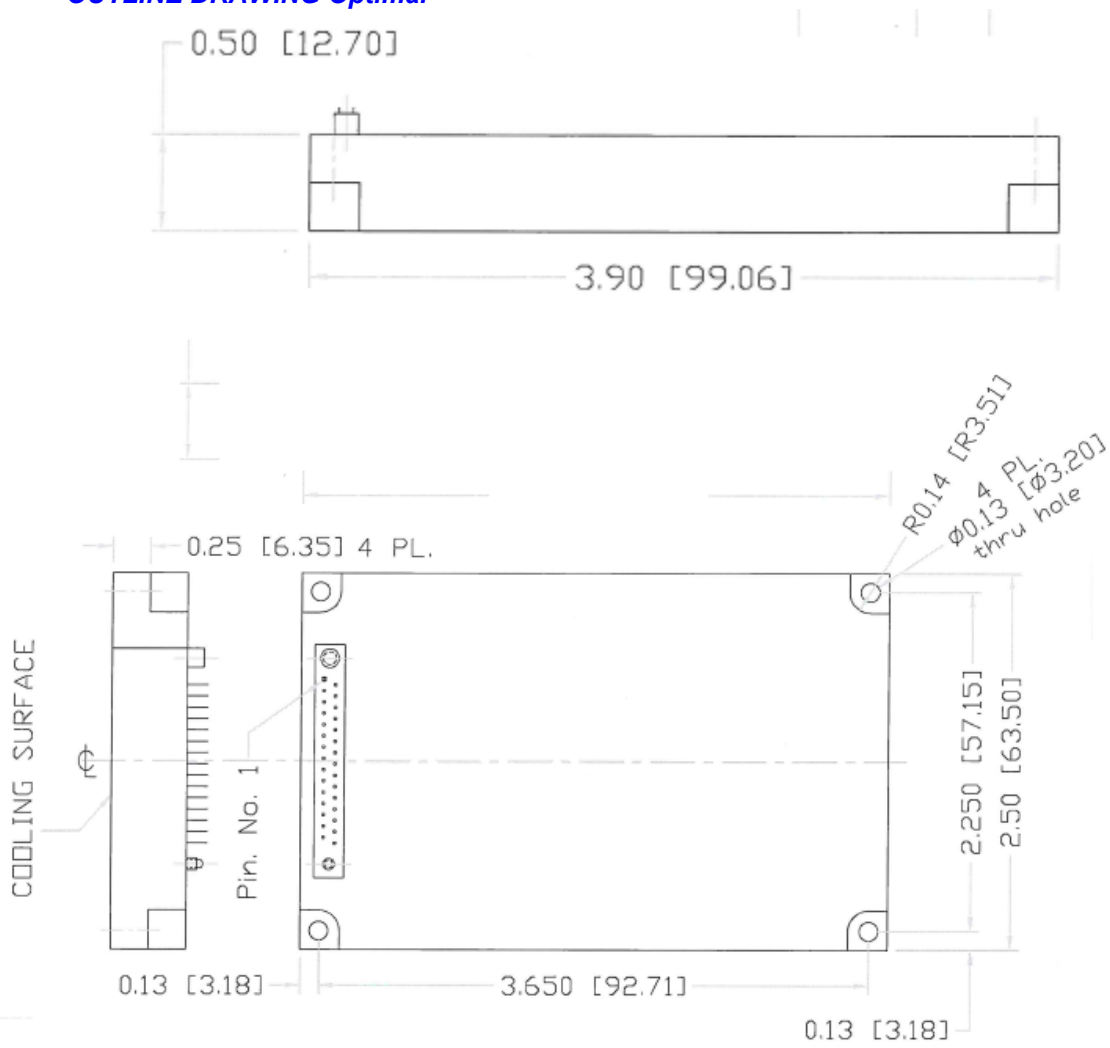

Notes

4. Dimensions are in Inches [mm]
5. Tolerance is:
   .XX ±0.01IN
   .XXX 0.005 IN
6. Weight: Approx. 4.4 oz (125 g)

*Specifications are subject to change without prior notice by the manufacturer